GMC INSTRUMENTS

GOSSEN METRAWATT
CAMILLE BAUER

KINAX N705-MEMS 4...20mA
Inclination transmitter

Description

The KINAX N705-MEMS is a robust inclinometer in industrial design. Due to its reliable measurement of tilt angle, high mechanical strength and compact, robust design it is particulary suitable for use in demanding and industrial environments. It serves the acquisition of inclination and angular position, processing and the provision of measured values for the downstream device.



Features

- High performance
- Compact industrial housing
- Splash and dust proof housing of IP67
- Resistant against high mechanical strains
- Measurement range of 0...360°
- High accuracy of 0,2°
- High repeatability of 0,1°
- High resolution of 12 bits
- Signal-output of 4...20 mA
- Free on-site parameterization

Benefits

- Precise positioning by high measuring accuracy
- Reliable operation in rough environment due to robust design
- Low installation costs due to easy and fast assembly
- Time saving commissioning due to the free on-site parameterization

Applications

Simple and reliable angle and inclination measurement in:

- Water power plants
- Solar energy power plants
- General machine and plant engineering
- Fresh and wastewater plants
- Construction and agricultural machinery
- Utility vehicles
- Cranes and hoists
- Industrial trucks

Technical data

General

Measured quantity:	Single-axis Tilt angle
Measuring principle:	Microelectromechanical capacitive tilt angle system

Measuring input

Measuring range:	-180°…+180° free programmable
Inclination angle:	Set to ±180°
Sense of rotation:	Adjustable for rotation clockwise or counter-clockwise

Measuring output

Measuring output:	4...20 mA at max. 250 Ω
Power supply:	18...33 VDC
Current consumption:	< 50 mA

Accuracy

Linearity:	0,2°
Repeatability:	0,1°
Resolution:	6 µA (12 bits / 25 mA)
Temperature coefficient:	~ 0,2° / 10K

Installation data

Material of housing:	Aluminium
Mounting position:	Perpendicular to the measurement object

KINAX N705-MEMS 4...20mA
Inclination transmitter

Electrical connection:	Connector M12x1,5 / 5 poles
Weight:	appr. 0,3 kg
Dimension:	66 x 66 x 30 mm

Regulations

Spurious radiation:	EN 61 000-6-3
Immunity:	EN 61 000-6-2
Test voltage:	500 Veff, 50 Hz, 1 min.
Housing protection:	IP 67 acc. to EN 60 529

Environmental condition

Climatic rating:	Temperature – 30° to + 70° C Relative humidity < 95%
Vibration resistance:	≤40 m/s² / 5...100 Hz acc. to EN 60068-2-6
Shock resistance:	500 m/s² / 18 ms acc. to EN 60068-2-27

Programming

The inclination transmitter is programmable via keypad on the device itself. You have the option to programm the device between two fixed tilt angles (start and end value) or for a symmetrical arrangement (zero position). In case of incorrect operation the factory settings can always be restored.

Scope of delivery

1 Inclination transmitter KINAX N705-MEMS 4...20mA

1 Connector M12 x 1,5 / 5 poles

1 Operating manual German, English

Ordering information of variants

Descriotion	Article No.
KINAX N705-MEMS 4...20mA	182569

Dimensions

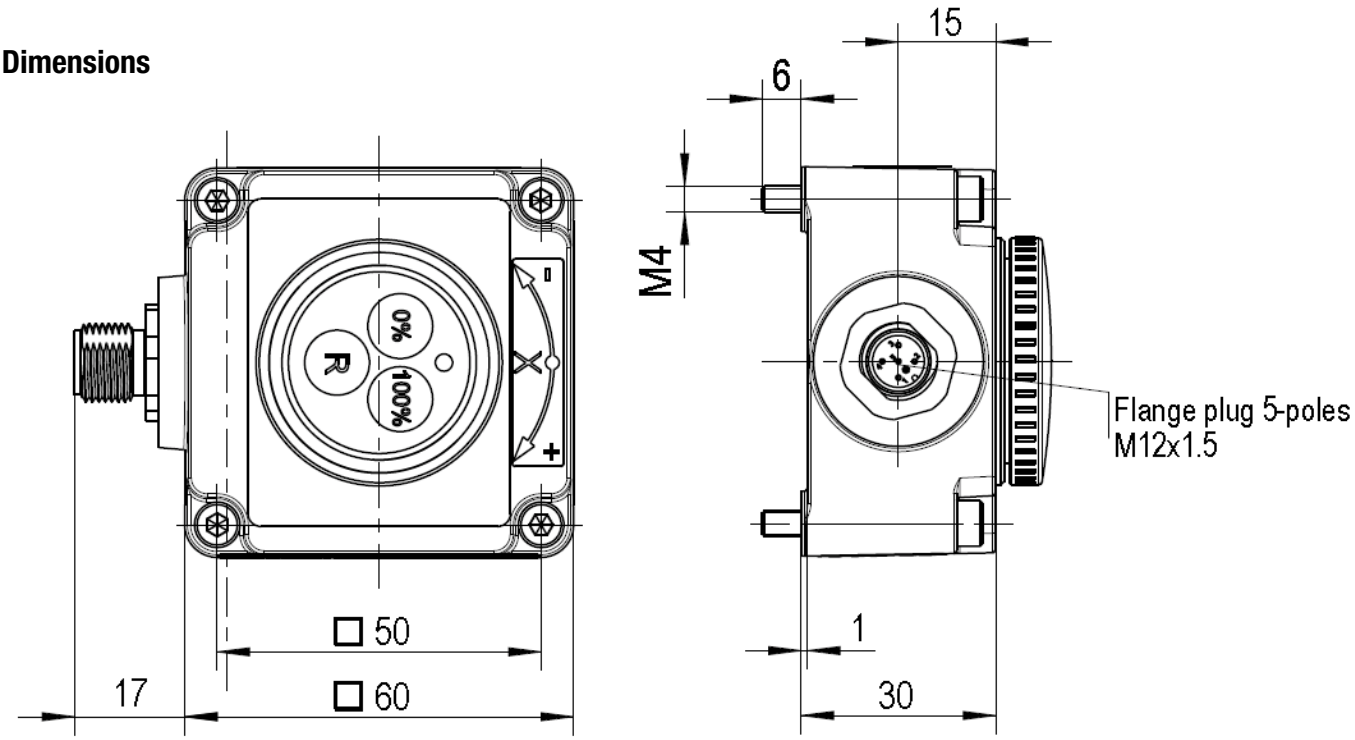

CAMILLE BAUER

Camille Bauer Metrawatt AG
www.mod-tronic.com
sales@mod-tronic.com
1-800-794-5883