REV	ECN	REVISION RECORD	DATE	DR	CK
A	11598	RELEASING PER AGENCY APPROVAL	1/23/2020	PV	TT
B	11782	NOTE 13 ADDED	9/9/2020	SS	PV
C	12358	COLUMN ADDED FOR -QXX OPTION	6/2/2022	PV	CS
D	12920	ADD CE 2776 AND UKCA 2503	5/24/2023	PV	CS
E	13098	ADD CML 21UKEX21086X	2/12/2024	PC	PV

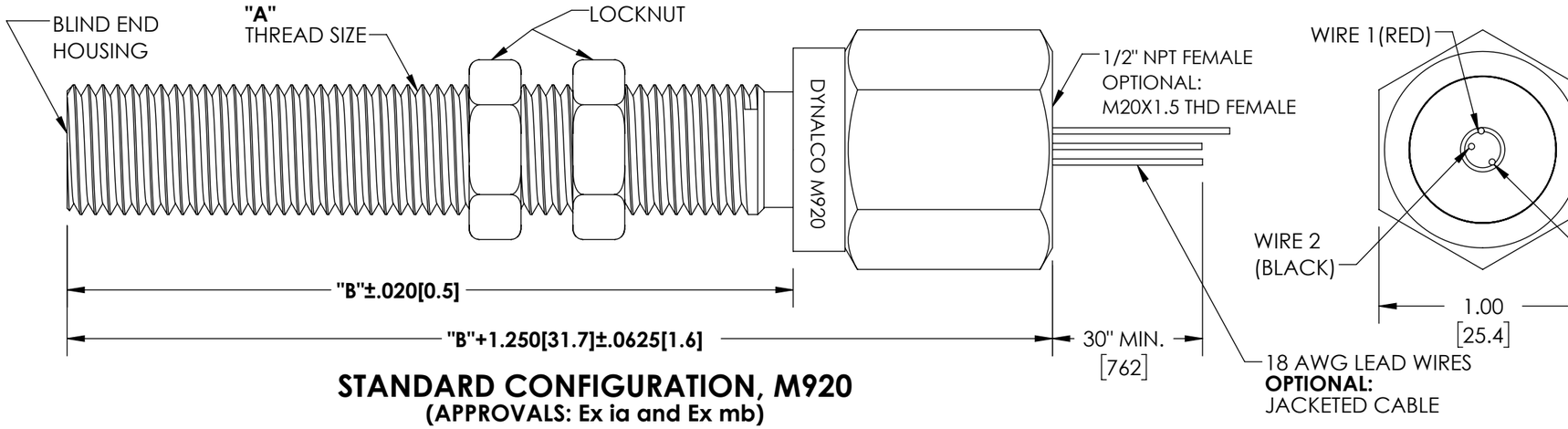

STANDARD CONFIGURATION, M920
(APPROVALS: Ex ia and Ex mb)

AGENCY APPROVAL:
ATEX/IECEx CERTIFIED

CE 2776

IEC IECEx Ex — II 1 G
Ex ia IIC T4 Ga
-40°C≤Tamb≤+80°C

II 2 G
Ex mb IIC T4 Gb
-40°C≤Tamb≤+90°C

UKCA 2503 — CML 19ATEX2489X
IECEx CML 19.0181X
CML 21UKEX21086X

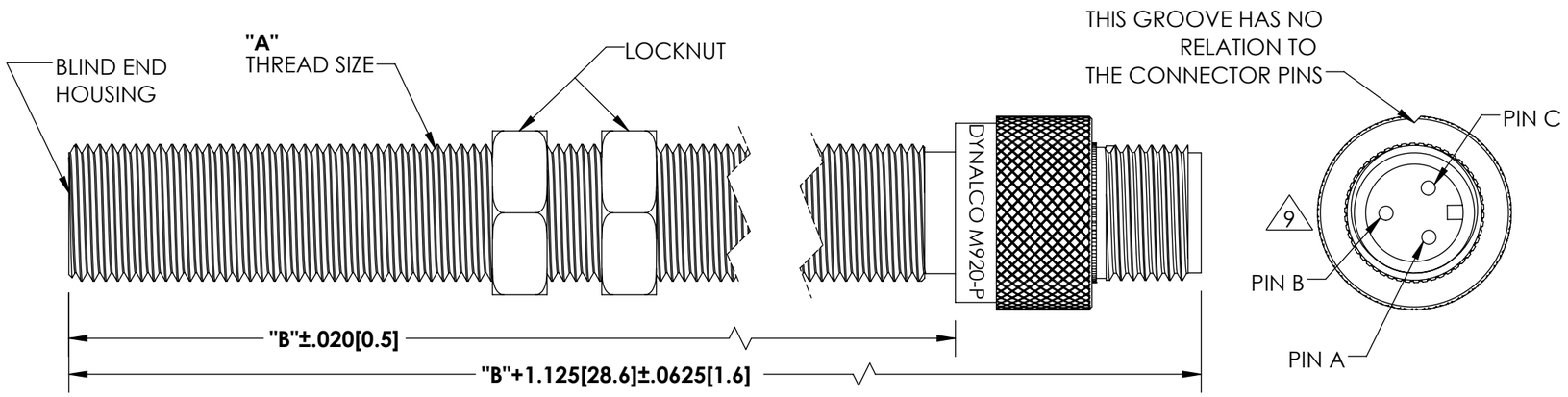

PIN CONFIGURATION, M920-P
(APPROVALS: Ex ia)

ELECTRICAL CONNECTIONS		
WIRE 1 (RED)	PIN A	POWER SUPPLY
WIRE 2 (BLACK)	PIN C	COMMON
WIRE 3 (WHITE)	PIN B	OUTPUT

NOTES:
1. POWER SUPPLY(Vin): Ex ia: 4.5 TO 14 VDC
   Ex mb: 4.5 TO18 VDC
2. SUPPLY CURRENT: **Ex ia**: 85 mA MAXIMUM
3. OPERATING TEMPERATURE: -40° F TO +257° F (-40°C to 125°C)
4. SENSED FREQUENCY: 0 TO 20 KHZ

△5 OUTPUT VOLTAGE: SQUARE WAVE 50±15% DUTY CYCLE.
FOR Ex mb CERTIFICATION, THE Vout PIN SHALL ONLY BE CONNECTED TO EQIPMENT WITH A MAXIMUM OPEN CIRCUIT VOLTAGE OF 18V AND A MAXIMUM SHORT CIRCUIT CURRENT OF 10mA.
M920-1: FANOUT TO 10 TTL INPUTS, RLOAD ≥ 10KΩ
- LOGIC 0: +0.4 VDC MAX AT 15mA MAX.
- LOGIC 1: >2.8V TO 5.0 VDC WITH 2KΩ PULL UP RESISTOR.

M920-2: LOGIC 0: +0.4 VDC MAX AT 15mA MAX.
LOGIC 1: $V_O=(V_{in}-0.7)xR_L / (R_L+2.0k)$
WHERE **Vin**=SOURCE VOLTAGE; **RL**=LOAD RESISTANCE

6. INSULATION RESISTANCE: 100 MΩ MIN. AT 500 VDC (COMMON TO HOUSING)
7. HOUSING: 303 STAINLESS STEEL, BLIND END.
8. OPTIMUM OPERATING AIR GAP: 0.02"[0.50] TO 0.10"[2.54]

△9 CABLE-CONNECTOR SOLD SEPARATELY FOR PIN CONFIGURATION.
C910-XX (XX: 10 TO 100 FT; 10 FT INCREMENT)

10. DIMENSIONS ARE IN INCHES [MM]
11. AMBIENT TEMPERATURE RANGES:
    -40°F to +176°F (-40°C to +80°C) FOR INTRINSICALLY SAFE (Ex ia) INSTALLATIONS.
    -40°F to +194°F (-40°C to +90°C) FOR ENCAPSULATION (Ex mb) INSTALLATIONS.
12. MARKING: WIRE OUTPUT OPTION: MARKING IS LASR ETCHED ON BODY.
    PIN OUTPUT OPTION: LABEL WILL BE PROVIDED WHICH MUST BE ATTACHED NEAR PICKUP INSTALLATION.
13. REFER #145-13238 FOR INSTALLATION INSTRUCTIONS BULLETIN OF M920

PRODUCT CONFIGURATOR

M920	-1	-A	-L3.5	-P	-Qxx
BASE NUMBER	OUTPUT TYPE	DIM "**A**" THREAD SIZE	DIM "**B**" THREAD LENGTH	ELECTRICAL CONNECTION	OPTIONS
M920 Hall-Effect (≥0 RPM) Senses Ferrous Material Encapsulated (Ex mb); Zone 1,2 Intrinsically safe (Ex ia); Zone 0,1,2	**-1**: TTL Output △5 **-2**: Vin-Based Output △5	**-A:** 5/8-18 UNF-2A - MIN. **-B**: 11/16-24 UNF-2A **-C**: 3/4-16 UNF-2A **-D**: 3/4-20 UNF-2A **-E**: M16 x 1.5-6g **-F**: M18 x 1.5-6g **-G**: M20 x 1.5-6g **-Z**: Custom thread (consult factory)	**-L1.875**: 1.875[47.6] (MIN.) **-L3.5:** 3.5[88.9] **-L6**: 6[152.4] (MAX.) **-Lxx**: Custom length (consult factory. **xx**: in inches, and within indicated min and max lengths)	**-Wxx*:** 1/2" NPT Conduit Connection (18 AWG wire output) **-M20-Wxx*:** M20x1.5 Female Connection (18 AWG wire output) **-Jxx*:** 1/2" NPT Conduit Connection with 18AWG Jacketed Cable **-M20-Jxx*:** M20x1.5 Female Connection with 18AWG Jacketed Cable ***xx:** 5-100 Ft., 1 Ft increment **-P**: Pin-output △9 (Only Intrinsically Safe "Ex ia" Approvals)	**-Qxx:** Private Label

THIS DOCUMENT, ALL INFORMATION CONTAINED IN AND ALL INFORMATION RELATED TO, IS PROPERTY OF DYNALCO, IS CONFIDENTIAL TO IT AND NO PART THEREOF NOR ANY SUCH INFORMATION MAY BE COPIED, DISSEMINATED OR USED IN ANY MANNER WHATSOEVER WITHOUT THE PRIOR WRITTEN CONSENT OF DYNALCO AND IS TO BE RETURNED TO DYNALCO UPON REQUEST.

UNLESS OTHERWISE SPECIFIED
DIMENSIONS ARE IN INCHES
DIMENSIONAL TOLERANCES:
FRACTIONAL ±1/64
ANGULAR: ± 1/2°
XX ±0.010
XXX ±0.005

THIRD ANGLE PROJECTION

DYNALCO®

MODEL: M920		DRAWN	PV
DATE: 06/28/17	PATH: N\PROD\PICKUPS\M920	APPROVED	JR
MATERIAL: -	TITLE: **PICKUP, ZERO VELOCITY**		
FINISH:	SIZE **B** / DWG. NO. **800-0920**		REV **E**
DO NOT SCALE DRAWING	SCALE 1:2 / WEIGHT	SHEET 1 OF 1	

"Copyright © 2017-2024, Barksdale Inc., All Rights Reserved"